Cyclic Agree Derives Restrictions on Cliticization in Classical Arabic*

Martin Walkow

University of Massachusetts Amherst

Abstract. Person based restrictions on clitic combinations serve as testing grounds for theories of syntactic locality (Anagnostopoulou 2003, Béjar & Řezáč 2003, Nevins 2007) and the means of avoiding them as windows into last resort mechanisms (Řezáč 2007, Preminger 2011a). Clitic restrictions in the verbal domain in Classical Arabic are shown to arise under Cyclic AGREE (Řezáč 2003, Béjar & Řezáč 2009), rather than (defective) intervention (Anagnostopoulou 2003, Béjar & Řezáč 2003, Nevins 2007). This offers a unified, syntactic analysis of the ultrastrong Person Case Constraint (Fassi Fehri 1988, Nevins 2007) and restrictions on combinations of third person clitics. The alternative structures used when cliticization is blocked are the PF realization of independently established syntactic relations, not a last resort mechanism. Several properties of person restrictions are shown to follow from the causative structure of double object verbs in Classical Arabic.
Keywords: Person Case Constraint, restrictions on third person, locality of AGREE, cliticization, causatives.

1. Person Based Restrictions and the Workings of AGREE

Person based restrictions on combinations of clitics or agreement markers have assumed great prominence as testing grounds for theories of the operation AGREE, the only non-structure building operation assumed in the framework of Chomsky (2000, 2001). Anagnostopoulou (2003), Béjar & Řezáč (2003) and Béjar (2003) show that such restrictions arise when two goals are in the domain of one probe and syntactic locality restricts the probe's ability to AGREE with both of them. Two major proposals have emerged of how syntactic locality leads to person based restrictions. On the one hand there is intervention based locality. In a structure [Probe $> x > y$], where $>$ is c-command, x may interfere with AGREE between the probe and y, if x has the right features. On the other hand, there is *Cyclic* AGREE (Řezáč 2003, Béjar 2003, Béjar & Řezáč 2009), where probes AGREE with one goal when they are first merged and gain access to the second one through the expansion of the phrase marker via Merge. As opposed to intervention, where the features of the higher goal bleed AGREE with the lower one, here, the lower goal can bleed AGREE with the higher one. Variation in person restrictions has served as a testing ground for the

*I would like to thank Rajesh Bhatt, Seth Cable and Kyle Johnson for their feedback on earlier stages on this work as well as the audiences at the Arabic Linguistic Symposium 2012, in particular Elabbas Benmamoun, Mohammad Mohammad and Usama Soltan, and at the Penn Linguistics Colloquium 2012, in particular Anthony Kroch. All remaining faults are my own.

two proposals. Languages differ on which combinations of person on the two arguments they ban. Intervention based proposals have mostly been applied to variation of the *Person Case Constraint* (PCC), a restriction on combinations of two internal argument clitics or agreement markers (Bonet 1991, 1994). Anagnostopoulou (2005) and Nevins (2007) locate this variation in the operation AGREE itself. Nevins (2007) in particular shows that multiple Multiple AGREE, an operation that allows AGREE between one probe and multiple goals in one step, can be paramterized to account for four different kinds of PCC. In this context, he presents an analysis of the clitic restrictions in Classical Arabic (CA) (e.g. Fassi Fehri 1988), which he calls the *ultrastrong* PCC. Cyclic AGREE analyses of variation have focussed on restrictions between subjects and objects (Béjar 2003, Béjar & Řezáč 2009). Variation is located more conservatively in the properties of the functional lexicon, in particular the feature specification of probes. Walkow (2011) shows, though, that the logic of cyclic expansion can also derive the so called *strong* PCC, which bans local person direct objects in the presence of all indirect objects. This paper contributes to this debate in three respects. The first concerns the scope of what syntactic analyses of person restrictions can and should explain. I show that CA has restrictions on combinations of third person pronouns in addition to the PCC, leading to the overall picture of person restrictions in (1).

(1) *The Classical Arabic Person Constraint:*

Two pronouns cliticize if

a. The syntactically higher one is more local than the lower one,

b. where: $1 \underset{\text{local}}{>} 2 \underset{\text{local}}{>} 3$

Restrictions on combinations of third person pronouns are typically argued to be morphological, rather than syntactic, and sidelined in discussions of the PCC (Anagnostopoulou 2003, Nevins 2007, Řezáč 2008). Continuing the argument in Walkow (2011, 2012a, t.a.) on Catalan and Spanish, the parallelism between the PCC and restrictions on third person are shown to follow naturally, if third person is represented in the syntax and participates in the same interactions of AGREE as other person categories. Secondly, I present a Cyclic AGREE analysis of (1) demonstrating the wider applicability of Cyclic AGREE to the PCC and its ability to deliver a move conservative account of variation. Thirdly, I address how the structure that gives rise to (1) relates to the strategies used when cliticization of both arguments is blocked. Previous work on alternative strategies for realizing banned clitic combinations has focussed on how the observed repair strategies avoid the PCC (Anagnostopoulou 2003, Řezáč 2007, 2008), and how the last-resort character of these strategies arises (Řezáč 2007). I argue that the alternate realization of banned clitic combinations in CA neither avoids the PCC nor is the result of a last resort mechanism. Rather, it is the derivational byproduct of AGREE relations that happen independently, but do not lead to cliticization. Core aspects of the analysis are motivated by the fact that (1) arises in causative structures.

The paper is organized as follows. Section 2 introduces the data about cliticization in CA and motivates (1). Section 3 shows that a central class of predicates that allow clitic combinations are causatives. Section 4 presents the analysis of (1) for causatives, and Section 5 shows how this explanation may extend to non-causative contexts that allow clitic combinations. Section 6 shows how the analysis here compares to the Multiple AGREE analysis.

		1:	2:	3:
SG:	M:	-iː/-niː	-ka	-hu
	F:		-ki	-hæː
Dual:		n/a	-kumæː	-humæː
PL:	M:	-næː	-kum	-hum
	F:		-kunːa	-hunːa

Table 1: Inventory of pronominal clitics in Classical Arabic (Wright 1874, vol 1:100).

2. Restrictions on Cliticization in Classical Arabic

The clitic restrictions in CA are an instance of a family of restrictions on marked person specifications on arguments in low syntactic positions known as the *Person Case Constraint* or PCC. After a brief introduction of the system of clitics and free pronouns in CA, Section 2.1 will present the restrictions on combinations containing local person pronouns as they have been discussed in previous analyses (Fassi Fehri 1988, Nevins 2007). Section 2.2 shows that the full picture of person restrictions in CA includes both the *ultra-strong* PCC and the ban on combinations of third person pronouns. Section 2.3 formulates two questions about the alternative realization of banned clitic combinations: Why is it always the direct object that is realized as a free pronoun, and why is it realized as a free pronoun, rather than a PP. The discussion is based on the grammar by Amr ibn Uthmān Sibawayh written in the late 8th century, the seminal book on Arabic grammar. It will be cited with page numbers from Derenbourg's 1881 critical edition, and occsionally accompanied by the corresponding page numbers in Jahn's (1900) translation to allow easier access.

Object pronouns in CA come in two morphological forms: clitic pronouns that attach to a host and free pronouns that do not. Clitic pronouns distinguish between three persons, two genders and three numbers, as shown in Table 1. Case distinctions are only present in the first person singular pronoun, which is *-iː* in genitive and *-niː* in accusative case. Free pronouns on the other hand consist of the genitive forms of the clitics plus the accusative marker *ʔɪjːaː-*, as illustrated in example (2). The choice between clitic and free pronouns is not free. Similar to what Cardinaletti & Starke (1999) observe for a variety of Indo-European languages, clitics must be used unless their use is blocked (e.g. Sibawayh 1881:§206ff, Howell 1880, pt *i*, vol 2:253, de Sacy 1905:377). The use of clitics is blocked, for example, when a pronominal object is fronted to the left of the verb as in (2), when it is separated from the verb as in the in second position in a conjunction, (3) (pronouns in initial conjuncts can cliticize, e.g. Reckendorf 1895:395), or when a clitic combination would violate (1).

(2) **ʔɪjːaː-ka** na-ʕbudu
ACC-2SG 1PL-worship
'Thee we worship'

(3) fa allah-u ja-rʕaː [abaː ħarb-in wa **ʔɪjːaː-naː**]$_{\&P}$
PRT Allah-NOM 3SG.M-protect father.ACC war-GEN and ACC-1PL
'Thus Allah protects a warrior and us' (Sibawayh 1881:332, §207)

Against this backdrop, (1) is a person based alternation between clitics and strong pronouns.

2.1 The Person Case Constraint

Clitic combinations arise when a predicate takes two non-nominative arguments. A core class of contexts are verbs like *ʔaʕtˤaː*, 'give,' in (4), that take two accusative complements. Section 5 will discuss some other contexts.

(4) ʔaʕtˤaɪ-tu zaɪd-an dɪrham-an
gave-1SG Zaid-ACC.IND Dirham-ACC.IND
'I gave Zaid a Dirham' (Howell 1880, pt *i*, vol 2:536)

For now I will refer to arguments like *zaɪd-an* as the *first accusative* and those like *dɪrham-an* as the *second accusative*. Section 3 will show that they are the causee and direct object of a causative predicate. When both of the accusative arguments are pronouns, Sibawayh (1881:335) reports, the possibility of clitic combinations depends on the person specification of the pronouns: a less local person pronoun must not precede a more local one, where first person is more local than second person, and second person is more local than third:

(5) *Sibawayh's Generalization:*
a. $*\mathrm{CL}_1 \underset{\text{local}}{<} \mathrm{CL}_2$,
b. where: $1 \underset{\text{local}}{>} 2 \underset{\text{local}}{>} 3$ (Sibawayh 1881:335)

The effect of (5) is illustrated in (6) and (7). Person combinations where cliticization of both accusatives is banned, as in (7), are realized by introducing the second accusative as a free pronoun (see Sibawayh 1881:336, Jahn 1900, pt *i*:98, Wright 1874, vol 1:104, Howell 1880, pt *i*, vol 2:540, Reckendorf 1895:394, Brockelmann 1960:59).

(6) *Possible clitic combinations*:

a. ʔaʕtˤaː **-niː** **-ka**
gave.3SG -CL.1SG -CL.2SG.M
'He gave me you'

b. ʔaʕtˤaː **-niː** **-hɪ**
gave.3SG -CL.1SG -CL.2SG.M
'He gave me him/it'

c. ʔaʕtˤaː **-ka** **-hu**
gave.3SG -CL.1SG -CL.3SG.M
'He gave you him/it' (Sibawayh 1881:336, Wright 1874, vol 1:103)

(7) *Banned clitic combinations*:
a. ʔaʕtˤaː **-ka** {***-niː**/ **ʔɪjːaː-ja**}
gave.3SG -CL.2SG.M {-CL.1SG.M/ -ACC-1SG.M}
'He gave me to you' (Sibawayh 1881:335/6)
b. ʔaʕtˤaː **-huː** {***-niː**/ **ʔɪjːaː-ja**}
gave.3SG -CL.2SG.M {-CL.1SG.M/ ACC-1SG}
'He gave me to him' (Sibawayh 1881:335/6, Wright 1874, vol 1:104)

c. ʔaʕtˤaː **-huː** {*-**ka**/ **ʔɪjːaː-ka**}
gave.3SG -CL.3SG.M {-CL.2SG.M/ -ACC-2SG.M}
'He gave him you' (Sibawayh 1881:336, de Sacy 1905:378)

The restriction on clitic combinations in (6/7) is not unique to CA. This exact pattern has also been reported for some speakers of Spanish (Perlmutter 1971) and Catalan (Bonet 1991:179). Nevins (2007) calls it the *ultrastrong PCC*. I will refer to it simply as *the PCC*, since no other varieties of PCC will be discussed here (see Walkow 2012b on the strong PCC in CA).

2.2 Combinations of Third Person Pronouns

Sibawayh reports that the pattern of cliticization with two third person pronouns is not as categorically as that of combinations with local person pronouns. Some combinations of third person clitics are possible, (8a), and some attested examples are reported in grammars, e.g. (8b) (also de Sacy 1905:379).

(8) *Possible combinations of two third person clitics*:

a. ʔaʕtˤaː {**-huː** **-haː**/ **-haː** **-hʊ**}
gave.3SG {-CL.3SG.F -CL.3SG.M/ -CL.3SG.F -CL.3SG.M}
'He gave {her to him/ him to her}' (Sibawayh 1881:336)

b. ʔasmɪʕ **-hʊmuː** **-hu**
CAUS.hear.IMP -CL.3PL.M -CL.3SG.M
'Make them hear it!' (Reckendorf 1895:394)

This is consistent with the generalization in (5), Sibawayh notes, because neither pronoun is more local than the other. At the same time, he reports that even the possible combinations like (8) are usually avoided. Like the banned clitic combinations with local person in (7), combinations of two third person pronouns are typically realized by using a free pronoun for the second accusative, (9).

(9) *Realizing Combinations of third person pronouns*:

a. ʔaʕtˤaː **-hʊ** **ʔɪjːaː-hu**
gave.3SG -CL.3SG.M ACC-3SG.M
'He gave him it' (Sibawayh 1881:336, Wright 1874, vol 1:104)

b. zaʊw⟨ː⟩aɟa **-hʊ** **ʔɪjːaː-haː**
marry⟨CAUS⟩.3SG.M -3SG.M ACC-CL.3SG.F
'He made him marry her' (Brockelmann 1960:59)

c. ʔa-nzɪlu **-hʊm** **ʔɪjːaː-haː**
CAUS-inhabit.3SG.M -CL.3PL.M ACC-3SG.F
'He made them inhabit it' (Reckendorf 1895:394)

Wright (1874, vol 1:103) furthermore reports that combinations of two masculine singular clitics as in (10) are categorically banned.

(10) * ʔaʕtˤaː **-hʊ** **-hʊ**
gave.3SG -CL.3SG.M -CL.3SG.M
'He gave him to him' (Wright 1874, vol 1:103)

Combinations of third person pronouns resemble those that violate (5). Cliticization of both arguments is (typically) avoided. Instead, the second accusative is realized as a free pronoun. When combinations of third person pronouns do surface, the two pronouns tend to differ in their gender/number-specifications. I would like to propose that the restriction in (5) and the restrictions on third person pronouns are part of the same larger restriction in (1). It is not just that the first accusative must not be less local than the second, but that the first accusative has to be more local than the second.

Syntactic analyses of the PCC typically sideline restrictions on combinations of third person pronouns arguing that these are morphological (e.g. Anagnostopoulou 2003, Nevins 2007, Řezáč 2008). This view is supported by the fact that restrictions on combinations of third person clitics in Romance and Basque force a change in the morphology of one of the clitics, rather than the use of a free pronoun as does the PCC. This difference between how restrictions on combinations of third and local person are circumvented is absent in CA. When cliticization is impossible, the second accusative is always realized as a free pronoun. This parallelism of how the grammar avoids restrictions on third and local person and the fact that all person restrictions fall under the same generalization in (1) suggests that all of (1) should follow from the same processes in the same module of grammar (for a more general argument to this point: Walkow 2012a).

In light of (1), what is to be made of possible third person clitic combination like (8)? I see two interpretations their grammaticality that maintain (1), but the sparsity of data does not allow us to distinguish between the two at this point. The first possibility is that (8) is the correct generalization about person, but that its effect is obscured in the realm of third person by the effect of number and gender. Phenomena of this kind are found in some dialects of Catalan (Walkow 2012a:§2.4.3.3/4). Non-Valencian Standard Catalan for example imposes restrictions on combinations of third person direct and indirect object clitics (DO and IO) as long as IO is singular. When IO is plural, no restrictions arise. The effect of number on clitic restrictions, however, is limited to combinations of third person clitics (e.g. Walkow 2012a:§4.3.3.1, Preminger 2011a:§2). CA may illustrate another such interaction of non-person features with cliticization that is limited to third person pronouns. A second possibility is to adopt the proposal that there are marked and unmarked instances of third person (e.g. Adger & Harbour 2007, Béjar 2003, Béjar & Řezáč 2009, Ormazabal & Romero 2007, Walkow 2012a). It is often observed that some third person arguments behave syntactically like local person ones. More specifically, third person arguments that are introduced as the specifiers of applicative heads or *v* often behave like marked third person. Section 3 will argue that the first accusative is the subject of a causativized predicate, making it a prime candidate for being marked third person. Combinations of two third person clitics would then be possible when the second accusative is an unmarked third person and the first one is a marked one that shares some property with local person. Such an analysis would weaken the letter of (1), but is entirely consistent with how 'more local' is implemented syntactically in Section 4 and how marked vs. unmarked third person is typically implemented syntactically (in particular Walkow 2012a:§4.2). Either of these lines

of analysis would assimilate the CA data in (8) to known phenomena of restrictions on agreement and cliticization while maintaining (1) as the fundamental generalization about the role of person in restricting clitic combinations in CA.

2.3 Alternate Strategies for Realizing Banned Clitic Combinations

Another set of questions concerns the alternative structure used when clitic combinations are blocked. As shown in (7/9), the second accusative is realized as a free pronoun in such contexts, irrespective of the particular person combination. CA differs in this respect from languages like Spanish and Catalan, where banned clitic combinations are avoided by changing the properties of IO when it is third person, but can be avoided by changing the properties of DO when IO is local person (Bonet 1991). CA's consistent choice of the second accusative as the argument to change when when cliticization is blocked needs an explanation.

The second question concerns what morphosyntactic change the alternative realization consists of. A remarkable property of PCC repairs in many languages is that they use morphosyntactic strategies that are not otherwise available (Bonet 1994, Řezáč 2007). For example, Spanish requires clitic doubling of strong DO pronouns, unless such pronouns are used to avoid the PCC. Similarly, PCC repairs on indirect objects in French have been argued to introduce the recipient as a PP rather than a dative, which is not otherwise possible (Postal 1990, Řezáč 2007). CA fits this pattern to the extent that free pronouns are not freely available (§2). The question then is why CA chooses the free pronoun over other strategies like introducing the theme argument with a preposition (possible with some double accusative verbs, Lane 1863, vol 5:2084 for *ʔaʕtˤaː*, 'give') when realizing pronoun combinations where cliticization is impossible.

2.4 Summary

This section has outlined the CA phenomena that will be analyzed in the remainder of this paper. Clitic combinations in verbal contexts observe the restriction in (1) that subsumes both the PCC, (5), and restrictions on third person. Person combinations where cliticization of both arguments is impossible are consistently realized by introducing the second accusative as a free pronoun. The next section shows that a core set of verbs where clitic restrictions arise are causative, and Section 4 shows that this derives (1) and the facts discussed in Section 2.3.

3. The Structure of Causative Double Accusative Verbs

The majority of verbs that take two accusative objects in CA share morphological, semantic and syntactic characteristics that indicate that they are causatives rather than double object constructions as they are found in English or Romance (e.g. Pylkkänen 2002, Cuervo 2003). This section presents evidence that these verbs have the underlying structure in (11) with three major properties: (i) Double accusative verbs are causatives, (ii) v^{caus}

takes (at lest) v^{ag} as its complement, and (iii) head movement raises V to v^{ag} and v^{caus}. Head-movement is shown here and below in gray.

(11) [S^{causer} [$V \cdot v^{ag} \cdot \boldsymbol{v}^{\mathbf{caus}}$ [$DP^{causee}_{[ACC]}$ [$V \cdot \boldsymbol{v}^{\mathbf{ag}}$ [V $DP^{DO}_{[ACC]}$]]]]]

Under this analysis, the first and second accusative are the subject and object of a causativized verb. This structure will be central to how (1) arises and why structures like (7) and (9) surface when it is violated. Section 5 discusses non-causative contexts where clitic combinations arise and briefly shows how the analysis motivated on the specifics of causatives extends to these contexts.

The relationship between double accusative verbs and causativity has long been noted in grammars of CA. Wright (1874, vol 2:47) divides the verbs that take two accusative complements into "all causatives of the [CCːC] and [ʔaCCC] verbal forms" on the one hand and, roughly speaking, verbs that take small clause complements. That is, double accusative verbs are derived verbs bearing the CCːC- and ʔaCCC-morphemes. Many uses of these morphemes are described as causative (e.g. Brockelmann 1960:139, Howell 1880, pt *iii*:265/270, Reckendorf 1895:44/6, Wright 1874, vol 2:48). Relatedly, Howell (1880, pt *iii*:103) and Reckendorf (1895:113) observe that the thematic relation between the first and the second accusative often mirrors the relation between the subject and the object of the verbs that the double accusative verbs are derived from. This is illustrated by pairs of underived and derived verbs like *samɪʕa*, 'hear,' vs. *ʔa-smaʕa*, 'make hear' (8c) and *tˤaʕama*, 'eat,' vs. *ʔa-tˤʕama*, 'feed' (8d), for ʔaCCC, and *ʕalɪma*, 'know,' vs. *ʕalːama*, 'teach' (14) below, for CCːC. The *give*-verb *ʔa-ʕtˤaː* in (6/7) is derived from the verb *ʕatˤaː* meaning "reach with the hands (to take)" (Lane 1863, vol 5:2084).

Syntactic evidence for a causative structure rather than a double object one comes from binding. Baker (1988:210ff) observes that causatives and double object constructions differ in their binding possibilities. Objects in double object constructions can only corefer with the subject if they are reflexive, (12a). Non-reflexive pronouns that are objects in causatives can corefer with the matrix subject, (12b). English data with periphrastic causatives appear here for convenience. Baker demonstrates these facts for morphological causatives. Example (13) shows that CA doubble accusative verbs pattern with causatives rather than double object constructions.

(12) a. John$_i$ showed Mary {him$_{*i}$/ himself$_i$.}
b. John$_i$ made Mary see {him$_{i\checkmark}$/ *himself$_i$.}

(13) ʔa-qbadˤ-tu$_i$ **-ka** **ʔɪyːaː-ja**$_i$
CAUS-take.3SG -CL.2SG.M ACC.1SG.M
'I made you take me' (de Sacy 1905:378)

The datum in (13) also adds evidence that causatives in CA involve head movement. Baker (1988) argues that the formation of causatives can involve head movement of V or phrasal movement of VP. These two options, he shows, affect the binding behavior of the direct objects in causatives. In VP-movement causatives, the direct object inside the VP is moved across the causee and placed in the same binding domain as the causer. Such causatives only allow coreference of the causer and the direct object when the direct object is a reflexive. Causatives where only V moves do not change binding relations. Such

causatives show the behavior in (13), where the causer and the direct object can co-refer while the direct object is a non-reflexive pronoun.

Finally, there is evidence that causative heads in CA can take complements as large as v^{ag}. Pylkkänen (2002:§3.4) shows that causatives differ on how big the complement of the causative head is. It can be the only the verbal root, the VP containing the verb and its internal argument, or a structure that contains the projection that introduces the verb's external argument (v^{ag}P here). Only languages of the third type allow causatives of transitive verbs that result in a structure with three arguments like in (11). As mentioned above, many double accusative verbs are transparently related to transitives, suggesting that they are of the third type.

The structure in (11) also makes a claim about the syntactic relation of the causee and the DO: the former is syntactically higher than the latter. No direct evidence for c-command between these two arguments is available. Support for a position of the causee above the DO comes from clitic order in nominalizations. Nominalizations allow combinations of subject and object clitics to a limited extent (§5) as in (14). In such combinations, the clitic of the subject, here *-iː*, precedes that of the object, *-hɪ*.

(14) ħubː **-iː** **-hɪ** ʕalːɪma-niː ʔatːanasːuk-a
love.M -CL.1SG.GEN -CL.3SG.M tought.3SG.M-CL.1SG DEF.religiousness-ACC
'My love of him' (Wright 1874, vol 2:59)

The leftward position of the subject clitic mirrors its higher syntactic position. In the structure in (11), the clitic order of causee and DO would mirror the underlying syntactic structure in the same way.

In summary, the three major features of the structure in (11) can be empirically supported. This supports the phrasing of (1) in terms of the syntactic relation between the two arguments.

4. Deriving the Person Case Constraint in Classical Arabic

This section presents a Cyclic AGREE based analysis of the data in Section 2. Section 4.1 introduces the AGREE based system of case and cliticization, and necessary assumptions about the syntactic representation of person. Section 4.2 shows how that system combined with the syntactic structure in (11) derives (1). Section 4.3 shows how the output of the syntactic computation is realized morphologically as either a clitic combination or a free pronoun for the second accusative.

4.1 AGREE, *Cliticization and Person Restrictions*

I adopt a system of case and agreement following Chomsky (2000, 2001), where the operation AGREE, (15), establishes a relation between the unvalued ϕ-features of probes ([$u\phi$]) and the valued ones of goals ([ϕ]) that results in the valuation of the probe's $u\phi$- and the goal's case-features.

(15) MATCHING is a relation that holds of a probe P and a goal G. Not every MATCHING pair induces AGREE. To do so, G must (at least) be in the *domain* D(P) of P and

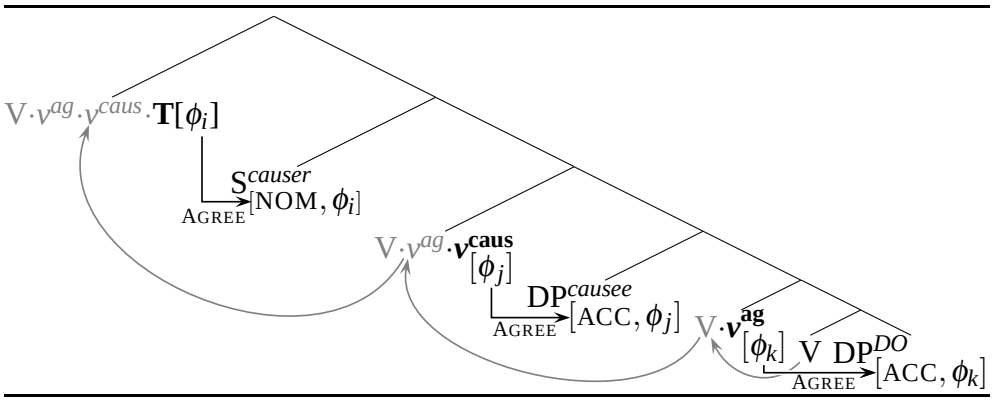

Table 2: AGREE relations in a double accusative construction.

satisfy locality conditions. The simplest assumptions for the probe-goal system are shown [below:]

a. Matching is feature identity.
b. D(P) is the sister of P.
c. Locality reduces to "closest c-command." (Chomsky 2000:122)

The identity of the probe, T or *v*, determines whether the case on the goal is nominative or accusative. Valued features on a probe can no longer enter further AGREE-relations and become *inactive*. The focus of the discussion here will be on objects. As an extension of the idea that *v* assigns case to object, I assume that both of the *v* projections in (11) do so. This leads to the relations of AGREE and case assignment illustrated in Table 2.

In addition to case and agreement, AGREE also drives movement and cliticization (e.g. Anagnostopoulou 2003, 2005, Béjar & Řezáč 2003, Preminger 2011a). The probe responsible for cliticization is often assumed to be *v* making cliticization a byproduct of case assignment (Anagnostopoulou 2003, Béjar & Řezáč 2003). Within this framework, restrictions on cliticization are restrictions on successful AGREE. Syntactic analyses of person restrictions (Anagnostopoulou 2003, 2005, Béjar 2003, Béjar & Řezáč 2003, 2009) have shown that they arise when two arguments compete to AGREE with the same agreement head. For the clitic restrictions under discussion here this is *v*. When both arguments AGREE, both cliticize. When one argument fails to AGREE, it hast to be licensed by some other head leading to a different morphosyntactic realization, or the derivation crashes (Řezáč 2007). Central to this type of analysis is the idea that probes cary multiple features and that enter AGREE independently of one another. In particular, Béjar (2003) and Béjar & Řezáč (2003, 2009) argue that person itself is not a monolithic probe, but consists of multiple independent features. Their proposal builds on Harley & Ritter's (2002) work on the structure of pronoun inventories. Harley & Ritter observe that pronoun inventories across languages show implicational relationships between person categories. They model these by morphological structures where more marked person categories (1/2) subsume the structure of less marked ones (3). Béjar & Řezáč argue that the implicational relations among person categories that are visible in the morphology are also present in their syntactic representation. They model this by representing person categories as sets of privative features where subset relations reflect the implicational relationships between person cat-

egories, Table 3. The feature specification of more local person categories subsumes the features of less local ones. Third person is the person category with the fewest features, rep-

Person:	3rd	2nd	1st
Feature Specification:	[π]	[π] [PART(ICIPANT)]	[π] [PART(ICIPANT)] [SPEA(KER)]

Table 3: Person categories as bundles of privative features (Béjar & Řezáč 2009:42).

resented only as [π]. First an second person have an additional [PART(ICIPANT)] that sets local person categories apart from third. First and second person are further distinguished from one another by the feature [SPEA(KER)].

The representations in Table 3 allow a restatement of the 'more local' part of (1) in terms of subset relations among features. A person category *X* is 'more local' than person category *Y*, if *X*'s person features are a superset of *Y*'s. I will write $\Phi(X)$ to mean *the person features of X*. The CA Person Constraint can now be restated as in (1′).

(1′) *The Classical Arabic Person Constraint:*
Two pronouns *x* and *y*, where $x > y$, cliticize if
  a. $\Phi(x) \supset \Phi(y)$
  b. where $\Phi(1) \supset \Phi(2) \supset \Phi(3)$

The feature bundles in Table 3 represent person on goals. Probes have unvalued variants of these features (on valuation in a system with privative features see Béjar 2003). How many of these features are present on the probe, $\begin{bmatrix} u\pi \\ u\text{PART} \\ u\text{SPEA} \end{bmatrix}$ vs. $\begin{bmatrix} u\pi \\ u\text{PART} \end{bmatrix}$ vs. [$u\pi$], determines how finely probes distinguish between person categories (Béjar 2003, Béjar & Řezáč 2009, Walkow 2012b for the strong vs. ultrastrong PCC in CA). For example, a probe that is specified as $\begin{bmatrix} u\pi \\ u\text{PART} \\ u\text{SPEA} \end{bmatrix}$ can distinguish between first and second person, because first person values all of its features, but second person leaves [*u*SPEA] active. A probe that is only specified for $\begin{bmatrix} u\pi \\ u\text{PART} \end{bmatrix}$ on the other hand is fully valued after AGREEING with either first or second person, and only distinguishes between third and local person. CA distinguishes between all three person categories, (5). Accordingly, I assume that its probes are specified as $\begin{bmatrix} u\pi \\ u\text{PART} \\ u\text{SPEA} \end{bmatrix}$.

The more complex syntactic representation of person requires a refinement of the notions of MATCHING an valuation. MATCHING as defined in (15a) requires that the features of probe and goal be identical. In the system here, this would disallow AGREE between a probe specified as $\begin{bmatrix} u\pi \\ u\text{PART} \\ u\text{SPEA} \end{bmatrix}$ and third or second person arguments that would only be specified as [π] and [π, PART], respectively (Béjar 2003:§2.6). Instead, Béjar & Řezáč (2009) define MATCHING in terms of subset relations between the features ('segments') of the probe and the goal.

(16) *Match Requirement*:
For a probe segment [*u*F], a subset [*u*F′] of [*u*F] must match.

(Béjar & Řezáč 2009:45)

A probe has MATCHED a goal, if at least one of its features has MATCHED. In the example above, a probe that is specified as $\begin{bmatrix} u\pi \\ u\text{PART} \\ u\text{SPEA} \end{bmatrix}$ can match a goal specified as $\begin{bmatrix} \pi \\ \text{PART} \end{bmatrix}$ because the [$u\pi$]- and [uPART]-features of the probe have matched the [π]- and [PART]-features of the goal. Activity, valuation and inactivity are refined as in (17).

(17) *Assumptions for* AGREE

a. Each feature that seeks to AGREE is active upon being inserted into the derivation.

b. When a feature [uF] matches with a goal [F′], AGREE copies the feature structure containing [F′] (i.e., all features that entail [F′]) to [F]; this constitutes valuing.

c. An active feature that is locally related to a nonactive feature (i.e., a feature that stands in the configuration created by [(17b)]) is no longer active.

(Béjar & Řezáč 2009:45)

Condition (17a) regulates activity. All ϕ-features enter the derivation active for AGREE. This differs from the one in (16) in that there, ϕ-features on arguments are not per se active, but are visible to AGREE due to the unvalued case features that they are associated with. Béjar & Řezáč move away from independent case features and try to reduce the effects of the case filter to the need for ϕ-agreement. I will not take a position on the necessity or desirability of case features here. For the core proposal about double accusative verbs, all that is necessary is that accusative case is the result of a relation between an argument and *v*, and that person AGREE regulates cliticization. Condition (17b) regulates valuation. Valuation is still copying of features, but it is not limited to the features that have been MATCHED. For example, when a probe agrees with multiple goals, it can happen that a probe has the unvalued features $\begin{bmatrix} u\text{PART} \\ u\text{SPEA} \end{bmatrix}$ and MATCHES a goal specified as $\begin{bmatrix} \pi \\ \text{PART} \end{bmatrix}$. MATCHING is only established between the [(u)PART]-features of probe and goal, but valuation will also copy the goal's [π]-feature, because it is contained in the feature structure that has been MATCHED. Inactivity, (17c), works much as before: Any feature that has MATCHED and AGREED becomes inactive. In addition, features that have contributed to valuation via being contained in a feature structure that has MATCHED and AGREED also become inactive. So in the example just discussed, the goal's [π]-feature, which is copied in valuation due to its relation to a [PART]-feature that AGREES, also becomes inactive.

The final question for this section is how AGREE between one probe with multiple goals comes about derivationally. Řezáč (2003) and Béjar & Řezáč (2009) argue that this happens in a two step process they call *cyclic expansion*. The first step of probing happens when the probe is first merged. In accordance with (15), it can probe anything in its complement in this step. The second step happens in the next cycle of the derivation. The probe's specifier is merged and a label for the resulting projection is created. According to Chomsky (2000), this label is identical to the head. The label of the projection accordingly contains the probe with its unvalued features and probes its specifier. Cyclic Expansion derives the probe's ability to AGREE with higher arguments from the cyclic construction of syntactic structure Under the logic of (in)activity, only features of the probe that did not AGREE in the first step can probe in the second one. Combined with the feature structures in Table 3, this means the second AGREE is possible when the first goal has a subset of the

Step 1: v^{ag} AGREES with 2-DO. Step 2: v^{ag} AGREES with 1-causee.

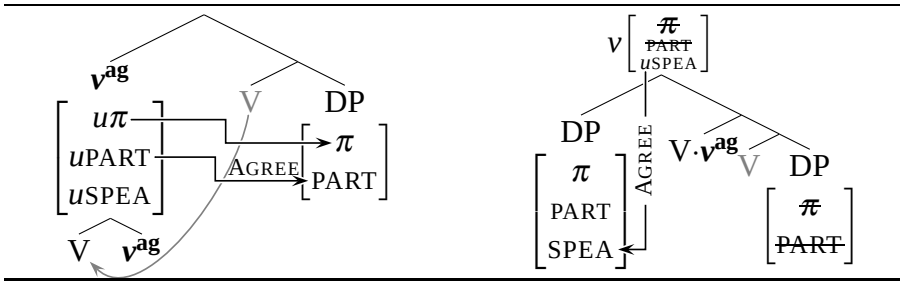

Table 4: Derivation for *ʔa-ʕtʕaː-niː-ka*, 'He gave you to me' (6a).

features on the probe, and the second goal has a superset of the first goal's features. Put differently, one probe can AGREE with two goals when the second goal is more local than the first. Whenever the first goal has the same or a superset of the features of the second goal, the second step of AGREE will be impossible.

Comparing this derivational logic to (1′) and (11) suggests that the probe responsible for clitic restrictions in CA is the one on v^{ag}. It is the only probe that is local enough to both DO and the causee to AGREE with them via Cyclic Expansion.

4.2 The Syntax of Person Restrictions

I begin with the derivation of possible clitic combinations where the causee is more local than the direct object. Due to the structure of person categories in Table 3, any such derivation will leave active features on v^{ag} after AGREE with the object that the causee can value. Thus v^{ag} can AGREE with both arguments allowing them to cliticize. This is illustrated in Table 4 with the derivation for (6a), where a second person object and a first person causee cliticize. The second person of the object is represented as $\left[\begin{smallmatrix}\pi\\ \text{PART}\end{smallmatrix}\right]$, the first person causee as $\left[\begin{smallmatrix}\pi\\ \text{PART}\\ \text{SPEA}\end{smallmatrix}\right]$. In Step 1, V has already undergone movement to v^{ag}. v^{ag}'s [$u\pi$]- and [uPART]-features AGREE with the corresponding features on the object. The object's ϕ-features are copied to the probe (not shown), rendering [(u)π] and [(u)PART] on probe and goal inactive (indicated by crossouts in Step 2). The probe's [uSPEA]-feature on the other hand remains unvalued and active. In Step 2, v^{ag}'s specifier, the causee, has been merged and v^{ag}'s features become the label of the resulting projection. This allows v^{ag}'s [uSPEA]-feature to probe the causee and AGREE with it's [SPEA]-feature. In accordance with (17), this leads to the copying of all of the causee's features to the probe, and their deactivation. In this person combination, v^{ag} has AGREED with both arguments allowing both of them to cliticize.

Two more remarks are in place about unvalued features on probes. In combinations of third person direct objects and second person indirect ones, v^{ag} will have an unvalued [uSPEA]-feature left at the end of the derivation. More generally, in all possible clitic combinations, the probe on v^{caus} does not AGREE at all. Both of these potential concerns are put to rest by recent work arguing that probes have rather modest licensing needs. Béjar & Řezáč (2009) propose that probes are licensed if at least one of their features has successfully AGREED. Preminger (2010, 2011a) more generally argues that a probe's failure to AGREE successfully never leads to ungrammaticality. Within that proposal, v^{caus}'s failure

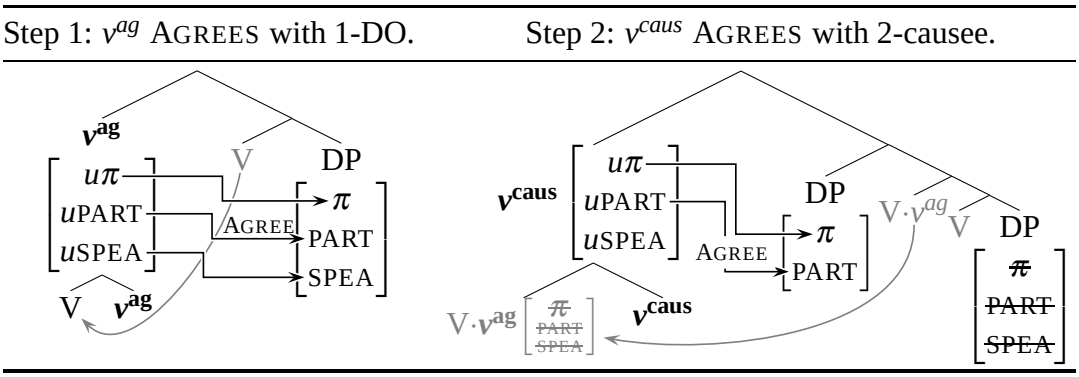

Table 5: Derivation for *ʔaʕtˤaː-ka ʔɪjːaː-ja*, 'He gave me to you' (7a).

to AGREE is entirely unproblematic.

Let us now turn to clitic combinations where cliticization of both pronouns is not possible. In all clitic combinations where the direct object is not less local than the causee, the direct object will deactivate any features on v^{ag} that the causee could value. As a result v^{ag} can never AGREE with both the direct object and the causee. This is illustrated in Table 5 for example (7a), a combination of a first person direct object with a second person causee. This time the direct object has all three person features, while the causee has only $\left[\begin{smallmatrix}\pi\\ \text{PART}\end{smallmatrix}\right]$. In Step 1, v^{ag} AGREES with DO in all of its features leaving it entirely inactive. When v^{ag}'s specifier is merged and v^{ag} becomes the label of the new structure, no second AGREE is possible, because v^{ag} is inactive. In Step 2, v^{caus} is merged and probes the causee. The two AGREE in all of the causee's features. Since neither probe has AGREED with both arguments, they cannot both cliticize.

The ban on combinations of third person pronouns, where DO and causee have the same features, is derived in the same way. DO deactivates v^{ag}'s [$u\pi$]. Since this is the only feature the causee has, AGREE between it and v^{ag} is impossible even though v^{ag} has active features left. The analysis for restrictions on clitic combinations involving local person pronouns thus naturally extends to those between third person ones.

4.3 The Morphological Realization of Pronoun Combinations

Section 4.2 showed under which conditions one probe can AGREE with two goals. This section turns to how the syntactic structures in Tables 4 and 5 are mapped to the morphological forms in (6/7), in particular why person combinations that disallow cliticization are realized by cliticizing the causee and using a free pronoun for the direct object. I identify two factors that govern cliticization in CA: (i) Cliticization spells out the syntactic dependencies of the highest valued probe in the *v*-domain and (ii) Cliticization and realization as a strong pronoun are two different ways of spelling out the syntactic relation between the probe and the goal: Clitics are the morphological realization of the goal's properties on the probe, while free pronouns are the realization of the probe's properties on the goal. The proposal is phrased in a late insertion model (e.g. Distributed Morphology, Halle & Marantz 1993) where the nodes manipulated by syntax do not contain phonological material and such material is inserted in the post syntactic component, sensitive to the output of the syntactic computation.

The syntactic dependencies in the *v* domain are spelled out as two clitics when v^{ag} has AGREED with both DO and the causee, in Table 4, and v^{caus} does not AGREE at all. This means that PF interprets a complex head of the form $v^{caus}_{[u\phi]} \cdot v^{ag} \begin{bmatrix} \pi \\ \text{PART} \\ (u)\text{SPEA} \end{bmatrix} \cdot \text{V}$ by mapping the syntactic dependencies of v^{ag} with both DO and the causee into the pair of clitics like *-niː-ka*. The unvalued probe on v^{caus} is ignored. The major difference between this and person combinations where only the causee cliticizes is that the complex head in the *v*P domain contains two valued probes as in Table 5: $v^{caus} \begin{bmatrix} \pi \\ \text{PART} \\ u\text{SPEA} \end{bmatrix} \cdot v^{ag} \begin{bmatrix} \pi \\ \text{PART} \\ \text{SPEA} \end{bmatrix} \cdot \text{V}$. This syntactic structure is spelled out by cliticizing only the causee. Taken together, this suggests that when faced with a complex head with multiple valued probes, PF spells out the dependencies of only the highest, valued probe in the *v*-domain as a clitic. I have no explanation why this would be so, but a similar pattern is reported for the phenomenon of double agreement in Dutch dialects by van Craenenbroeck & van Koppen (2002). The reason then why in the causee cliticises rather than DO when clitic combinations are impossible is that the interaction of two probes and head movement bleeds the realization of v^{ag}'s dependencies as cliticization.

The use of a free pronoun for DO when it cannot cliticize can be understood in analogy to PCC repairs in Romance languages. PCC repairs in Romance languages often consist of a preposition or case marker *a* plus a non-nominative pronoun (e.g. Spanish and Catalan: Bonet 1991, French: Řezáč 2008:98, Italian: Cardinaletti & Starke 1999:169). The pronoun forms with *a* also appear when pronouns are topicalized or coordinated (Cardinaletti & Starke 1999). Řezáč (2007) suggests that *a* in PCC repairs is the morphological realization of a probe that is added to avoid a crashing derivation and license an argument that has failed to AGREE with *v*. This last-resort addition of a probe accounts for the fact that PCC repair strategies are not freely available elsewhere and sometimes morphosyntactically unusual (§2.3). *ʔɪjːaː-* resembles *a* both in its distribution, see (2/3), and in its association with case. Analogous to Řezáč's (2007) proposal for *a*, I propose that *ʔɪjːaː-* is the realization of the probe that licenses the direct object. Unlike in his proposal, however, this probe is not added to avoid a crashing derivation, but is the probe of v^{ag}, which is independently present.

In conclusion, the realization of banned clitic combinations with strong pronouns can be attributed to an alternate way of spelling out syntactic dependencies that are independently established. The ungrammaticality of the clitic combinations in (7) then is not the result of a crashing derivation, but rather there is no derivation that leads to a clitic combination in these person combinations. A derivation that contains the relevant lexical items in the numeration will always lead to a morphological realization of the direct object as a free pronoun rather than a clitic. In this respect the proposal here resembles Preminger's (2011a) proposal about ungrammaticality in other agreement restrictions.

5. Clitic Combinations in Other Contexts

In addition to the causative verbs discussed so far, I am aware of four contexts where combinations of pronominal clitics are possible: (i) some underived verbs, (ii) nominalizations like (14), (iii) some verbs with small clause complements, and (iv) preposi-

tional imperatives. Sibawayh (1881:336) reports that clitic combinations of the second and third typer are rather marginal, and the status of (iv) is somewhat unclear (Sibawayh 1881:334/§208). I will only discuss nominalizations here, because they raise interesting questions about case. I will discuss (i) and (ii) in turn and outline how the analysis in Section 4.2 could extend to them.

There are some underived verbs that take two accusative complements and allow cliticization, e.g. (18). Wright (1874, vol 2:47) reports that these are verbs with meanings similar to *fill*, *satisfy*, *give*, *deprive*, *forbid*, *ask* or *entreat*.

(18) *Clitic clusters on Non-causative double object verbs*:

a. na-biːʕu-**ka-hu**
1PL-sell-CL.2SG.M-CL.3SG.M
'We sell you it'
(Reckendorf 1895:111)

b. sal-**niː-haː**
ask for.IMP.M.SG-CL.1SG-CL.3SG.F
'Ask me (about) it!'
(de Sacy 1905:379)

(19) dˤaraba zaid-an ʔaðˤːahr-a
beat.3SG.M Zaid-ACC DEF.back-ACC
'He slapped Zaid (on) the back' (Reckendorf 1895:113)

In addition, normally transitive verbs like *dˤaraba*, 'beat,' in (19), can take two objects when one is a body part of the other. Reckendorf (1895:113) reports that the construction in (19) typically involves an animate second accusative and that the whole individual denoted by the second accusative is affected by the action performed on its part. The construction is reminiscent of possessive datives in Romance languages that require a similar part-whole relation between two internal arguments (e.g. Spanish: Cuervo 2003:2.2.2/3). I do not know whether these verbs are subject to (1). If they are, they could be integrated into the analysis here by treating them as true double object constructions similar to English, and adopting an applicative analysis along the lines of Pylkkänen (2002) and Cuervo (2003). In applicative double object constructions, the non-theme argument is introduced as the specifier of an applicative head (APPL) that can be in several positions below *v* (Cuervo 2003). To derive the clitic restrictions from the interactions of head movement and two probes, APPL^0 would have to bear a ϕ-probe just like *v* (e.g. Adger & Harbour 2007) and undergo head movement. To fully motivate such an analysis one would have to show that constructions like those in (18/19) have the properties of associated with low applicatives, which is beyond the scope of the proposal here.

Clitic combinations are also possible in nominalizations as in (14): *ħubːiːhɪ*. Sibawayh reports that they observe (5), but a strong pronoun is commonly used for the second clitic even in person combinations that obey (5) (Sibawayh 1881:333, §207, Jahn 1900, pt *ii*:95, also Howell 1880, pt *i*, vol 2:542). The proposal here derives cliticization in nominalizations in the same way as in the verbal domain. Subjects and objects are introduced by v^{ag}, and v^{ag}'s probe can AGREE with both of them under the same conditions as elsewhere. The presence of (1) in nominalizations and with verbs follows without additional stipulation. An important difference between (14) and other clitic combinations, however, is case. The subject clitic in (14) is bears genitive, rather than accusative as would be expected from case assignment by v^{ag}. The case of the object clitic is not morphologically marked, but the case assignment patterns with non-pronominal arguments in nominalizations show

that genitive subjects appear together with accusative objects (Wright 1874, vol 2:58). If both subject and object AGREE with v^{ag} to cliticize and receive case, the two arguments should not have different case values. PCC between arguments with different cases is quite common. In Romance languages the PCC typically arises between dative and accusative arguments. A preliminary proposal for these contexts is that they are further evidence for separating restrictions on cliticization from case assignment. I have argued in previous work on Catalan (Walkow 2012a, t.a.) that the assignment of dative an accusative case is separated from person agreement. Preminger (2011b,a) makes a more general argument for separating person licensing from the case filter. Independently, there is a long line of work on deriving case from syntactic configurations of arguments rather than by assignment via functional heads (Marantz 1991, McFadden 2004, Bobaljik 2008, Preminger 2011a, Pesetsky 2012). Extending this division of ϕ-AGREE and case to CA, one could say that the mechanism of ϕ-AGREE developed here accounts for the possibility of cliticization, but other aspects of the syntactic structure determine the case of the arguments.

6. A Multiple AGREE *Analysis*

The only extant analysis of the clitic restrictions in CA as restrictions on AGREE is in Nevins (2007) where it is part of a larger proposal about variation in person restrictions. The proposal differs from the one here in three points. First, Nevins uses Multiple AGREE, which allows one probe to AGREE with multiple goals in one step. Person restrictions arise from restrictions on the operation Multiple AGREE. Second, different kinds of PCC arise from how the restrictions on Multiple AGREE are parameterized. Thirdly, the system uses binary rather than privative features. I will begin by presenting the Multiple AGREE analysis for (5), and then go on to show how it falls short at accounting for restrictions on third person clitics.

The Multiple AGREE analysis relies on representations of person categories using two binary features [±PART(ICIPANT)] and [±AUTH(OR)]. The three person categories are represented as 1: [+PART, +AUTH], 2: [+PART, –AUTH] and 3: [–PART, –AUTH]. The binary status of the features is key to how Multiple AGREE is restricted. The Multiple AGREE proposal also differs in its assumptions about syntactic structure. The probe that is responsible for deriving clitic combinations is always above both arguments. In the syntactic structure argued for in Section 3, it would be $[v^{caus}_{[u\phi]}$ [$\mathrm{DP}^{causee} \ldots \mathrm{DP}^{\mathrm{DO}}$].

Person restrictions arise from two restrictions on Multiple AGREE called *Contiguous Agree* and *Matched Values*. Matched Values will not be discussed here as it does not contribute to the restrictions in CA. Informally, Contiguous Agree requires that when a probe $\mathbb{P}$ AGREES in some feature with an argument x in a structure $\mathbb{P} > y > x$, y also has to have that feature. Which features Contiguous Agree is sensitive to is parameterized and the different parameterizations derive different patterns of PCC. Nevins (2007) proposes that Contiguous Agree in CA is parameterized to [+AUTH] and [+PART], leading to the definition of *Contiguous Agree* in CA in (20).

(20) *Parametrization of Contiguous Agree in Classical Arabic*:
For the value {+} of the features [±PART] and [±AUTH] on a Probe $\mathbb{P}$,

If x is [+AUTH], $\neg\exists y$, such that $y > x$ and $\mathbb{P} > y$ and y is not [+AUTH]

and

If x is [+PART], $\neg\exists y$, such that $y > x$ and $\mathbb{P} > y$ and y is not [+PART]

There can be no interveners between $\mathbb{P}$ *and x that are not valued* $\{+\}$ *for whichever of* [+PART] *and* [+AUTH] *x has.*

(based on Nevins 2007:291, 298)

Contiguous Agree as in (20) derives the clitic restrictions as follows. 1-2, *-niː-ka*, satisfies (20), because the lower 2 has a [+PART] that is shared by the higher 1. 3-1, **-huː-niː*, and 3-2, **-huː-ka*, are ruled out, because the lower arguments' [+PART] and [+AUTH] features are not shared by the higher 3. Similarly, 2-1, **-ka-niː*, is ruled out because the probe could AGREE with the lower 1 in both [+AUTH] and [+PART], but the higher 2 lacks [+AUTH]. Finally, 1-3, *-niː-hɪ*, and 2-3, *-ka-hu*, are ruled in, because they satisfy (20) vacuously. Contiguous Agree is operative only when the lower argument is specified for [+AUTH] or [+PART]. Since third person lacks both of these specifications, any combination that contains a 3-DO satisfies it and Multiple AGREE can target both internal arguments.

The multiple AGREE account does not deliver restrictions on third person pronouns. Since third person lacks the features that Contiguous Agree is parameterized for, combinations of third person pronouns vacuously satisfy it and can enter Multiple AGREE. The proposal predicts that combinations of third person pronouns should be generally possible, which is not the case. Nevins (2007) discusses restrictions on third person pronouns in Basque and Spanish, and attributes them to postsyntactic processes. As argued in Section 2.2, this type of explanation is not plausible for CA.

In conclusion, the Multiple AGREE system cannot account for the full set of person restrictions in (1). The Cyclic AGREE proposal presented here gives a unified analysis of (1) while conservatively locating variation in the functional lexicon.

References

Adger, David & Daniel Harbour. 2007. The syntax and syncretisms of the Person Case Constraint. *Syntax* 10. 2–37.

Anagnostopoulou, Elena. 2003. *The syntax of ditransitives, evidence from clitics*. Berlin: Mouton de Gruyter.

Anagnostopoulou, Elena. 2005. Strong and weak person restrictions, a feature checking analysis. *Clitic and affix combinations* ed. by Lorie Heggie & Francisco Ordóñez , 199–235. Amsterdam: John Benjamins.

Baker, Mark. 1988. *Incorporation: A theory of grammatical function changing*. Chicago: University of Chicago Press.

Béjar, Susana. 2003. *Phi-syntax: A theory of agreement*: University of Toronto dissertation.

Béjar, Susana & Milan Řezáč. 2003. Person licensing and the derivation of PCC effects. *Romance linguistics: Theory and acquisition* ed. by Ana-Teresa Pérez-Leroux & Yves Roberge , 49–61. Amsterdam: John Benjamins.

Béjar, Susana & Milan Řezáč. 2009. Cyclic Agree. *Linguistic Inquiry* 40:1. 35–73.

Bobaljik, Jonathan David. 2008. Where's phi? Agreement as a post-syntactic operation. *Phi-theory: Phi features across interfaces and modules* ed. by Daniel Harbour, David Adger, & Susana Béjar , 295–328. Oxford: Oxford University Press.

Bonet, Eulàlia. 1991. *Morphology after syntax: pronominal clitics in Romance*. Boston, MA: MIT dissertation.

Bonet, Eulàlia. 1994. The person-case constraint: A morphological approach. *The morphology-syntax connection* (MIT Working Papers in Linguistics 22), 33–52. Boston, MA: MIT Press.

Brockelmann, Carl. 1960. *Arabische Grammatik*. VEB Otto Harrassowitz.

Cardinaletti, Anna & Michal Starke. 1999. The typology of structural deficiency: A case study of the three classes of pronouns. *Clitics in the languages of Europe* ed. by Henk van Riemsdijk , 145–233. Berlin: Mouton de Gruyter.

Chomsky, Noam. 2000. Minimalist inquiries: The framework. *Step by step: Essays on minimalism in honor of Howard Lasnik* ed. by R. Martin, D. Michaels & Juan Uriagareka , 89–155. Cambridge, Mass: MIT Press.

Chomsky, Noam. 2001. Derivation by phase. *Ken Hale, A life in language* ed. by Michael Kenstowicz , chap. 1, 1–52. Cambridge, MA: MIT-Press.

Cuervo, María Cristina. 2003. *Datives at Large*. Cambridge, MA: MIT dissertation.

Fassi Fehri, Abdelkader. 1988. Agreement in Arabic, binding and coherence. *Agreement in natural language, approaches, theories, descriptions* ed. by Michael Barlow & Charles A. Ferguson , chap. 6, 107–158. CSLI.

Halle, Morris & Alec Marantz. 1993. Distributed Morphology and the Pieces of Inflection. *The View from Building 20: Essays in linguistics in honor of Sylvain Bromberger* ed. by K. Hale & S. Keyser , 111–176. Cambridge, MA: MIT Press.

Harley, Heidi & Elizabeth Ritter. 2002. Person and number in pronouns: A feature-geometric analysis. *Language* 78:3. 482–526.

Howell, Mortimer Sloper. 1880. *A grammar of the Classical Arabic language in four parts*. Allahabad: North-Western Provinces and Oudh Government Press.

Jahn, Gustav. 1900. *Sîbawaihi's Buch über die Grammatik*, vol. 2. Berlin: Reuther & Reichard.

Lane, Edward William. 1863. *An Arabic-English lexicon*. London: Williams and Norgate.

Marantz, Alec. 1991. Case and licensing. *Proceedings of ESCOL '91* ed. by German Westphal, Benjamin Ao & Hee-Rahk Chae , 234–253. Cornell Linguistics Club.

McFadden, Thomas. 2004. *The position of morphological case in the derivation: a study on the syntax-morphology interface*. Philadelphia: University of Pennsylvania dissertation.

Nevins, Andrew. 2007. The representation of third person and its consequences for person-case effects. *Natural Language & Linguistic Theory* 25. 273–313.

Ormazabal, Javier & Juan Romero. 2007. The Object Agreement Constraint. *Natural Language & Linguistic Theory* 25. 315–347.

Perlmutter, David M. 1971. *Deep and surface structure constraints in syntax*. New York: Holt, Rinehart and Winston.

Pesetsky, David. 2012. Russian case morphology and the syntactic categories. Ms. MIT.

Postal, Paul M. 1990. French indirect object demotion. *Studies in Relational Grammar 3* ed. by Paul M. Postal & Brian D. Joseph , 104–200. Chicago: University of Chicago

Press.

Preminger, Omer. 2010. Failure to agree is not a failure: ϕ-Agreement with Post-Verbal Subjects in Hebrew. *Linguistic Variation Yearbook* ed. by Jeroen van Craenenbroeck & Johan Rooryck , vol. 9, 241–278. Amsterdam: John Benjamins.

Preminger, Omer. 2011a. *Agreement as a fallible operation*. Cambridge, MA: MIT dissertation.

Preminger, Omer. 2011b. Asymmetries between person and number in syntax: a commentary on Baker's SCOPA. *Natural Language & Linguistic Theory* 29. 917–937.

Pylkkänen, Liina. 2002. *Introducing arguments*: Massachusetts Institute of Technology Doctoral dissertation.

Reckendorf, Hermann. 1895. *Die Syntaktischen Verhältnisse des Arabischen*. E. J. Brill.

Řezáč, Milan. 2003. The fine structure of cyclic agree. *Syntax* 6:2. 156–182.

Řezáč, Milan. 2007. Escaping the person case constraint: Reference-set computation in the ϕ-system. *Linguistic variation yearbook 6*, 97–138.

Řezáč, Milan. 2008. The syntax of eccentric agreement: The person case constraint and ansolutive displacement in Basque. *Natural Language & Linguistic Theory* 26. 61–106.

de Sacy, Antoine Isaac Silvestre. 1905. *Grammaire arabe*, vol. 2. Tunis: Société anonyme de l'imprimerie rapide 3rd edn.

Sibawayh, 'Amr ibn 'Uthmān. 1881. *Le Livre de Sîbawaihi, traité de Grammaire Arabe*, vol. 1. Paris: Imprimerie Nationale.

van Craenenbroeck, Jeroen & Marjo van Koppen. 2002. The locality pf agreement and the cp-donain. Handout GLOW 25, April 9–11 2002.

Walkow, Martin. 2011. Person effects and the representation of third person. An argument from Barceloní Catalan. *Romance languages and linguistic theory 2009. selected papers from 'Going Romance' Nice 2009* ed. by Janine Berns, Haike Jacobs & Tobias Scheer , 343–361. Amsterdam: John Benjamins.

Walkow, Martin. 2012a. *Goals, big and small*. Amherst, MA: University of Massachusetts at Amherst dissertation.

Walkow, Martin. 2012b. Locating variation in person restrictions. Handout from 36th Annual Penn Linguistics Colloquium, March 23–25. 2012.

Walkow, Martin. t.a. The syntax of the person case constraint drives morphological impoverishment of clitics. *Proceedings of the poster session of 29th West Coast Conference on Formal Linguistics* Coyote Papers: Working Papers in Linguistics, .

Wright, William. 1874. *A grammar of the Arabic language*. Cambride University Press.